LINEA ROSSA LLC

LR-530F THERMALLY BROKEN FIXED WINDOW (HVHZ)(IMPACT)

GENERAL NOTES:

1. THE PRODUCT SHOWN HEREIN IS DESIGNED AND MANUFACTURED TO COMPLY WITH THE CURRENT EDITION FLORIDA BUILDING CODE (FBC), **INCLUDING** HVHZ, AND HAS BEEN EVALUATED ACCORDING TO THE FOLLOWING:
   - TAS 201-94
   - TAS 202-94
   - TAS 203-94
   - ASTM E1886-13a/19
   - ASTM E1996-17/20
2. ADEQUACY OF THE EXISTING STRUCTURAL CONCRETE/MASONRY, 2X FRAMING, AND METAL FRAMING AS A MAIN WIND FORCE RESISTING SYSTEM CAPABLE OF WITHSTANDING AND TRANSFERRING APPLIED PRODUCT LOADS TO THE FOUNDATION IS THE RESPONSIBILITY OF THE ENGINEER OR ARCHITECT OF RECORD FOR THE PROJECT OF INSTALLATION.
3. 1X AND 2X BUCKS (WHEN USED) SHALL BE DESIGNED AND ANCHORED TO PROPERLY TRANSFER ALL LOADS TO THE STRUCTURE. BUCK DESIGN AND INSTALLATION IS THE RESPONSIBILITY OF THE ENGINEER OR ARCHITECT OF RECORD FOR THE PROJECT OF INSTALLATION.
4. THE INSTALLATION DETAILS DESCRIBED HEREIN ARE GENERIC AND MAY NOT REFLECT ACTUAL CONDITIONS FOR A SPECIFIC SITE. IF SITE CONDITIONS CAUSE INSTALLATION TO DEVIATE FROM THE REQUIREMENTS DETAILED HEREIN, A LICENSED ENGINEER OR ARCHITECT SHALL PREPARE SITE SPECIFIC DOCUMENTS FOR USE WITH THIS DOCUMENT IN NON-HVHZ AREAS.
5. APPROVED IMPACT PROTECTIVE SYSTEM **IS NOT REQUIRED** ON THIS PRODUCT IN AREAS REQUIRING IMPACT RESISTANCE.
6. WINDOW FRAME MATERIAL: ALUMINUM 6063-T6
7. GLASS MEETS THE REQUIREMENTS OF ASTM E 1300 GLASS CHARTS. SEE SHEET 1 FOR GLAZING DETAIL.

MAX. WINDOW FRAME SIZE		CONFIG.	DESIGN PRESSURE	INTEGRAL MULLION	MISSILE IMPACT RATING
WIDTH	HEIGHT				
42"	90"	O	+80/-80 PSF	N/A	LARGE & SMALL MISSILE IMPACT
42"	90"	OO	+80/-80 PSF	MULLION TUBE	

TABLE OF CONTENTS

SHEET	SHEET DESCRIPTION
1	GENERAL NOTES & GLAZING DETAIL
2	ELEVATION, ANCHOR LAYOUT, & DESIGN PRESSURE TABLE
3	ELEVATION, ANCHOR LAYOUT, & DESIGN PRESSURE TABLE
4	VERTICAL SECTION
5	HORIZONTAL SECTIONS
6	INSTALLATION NOTES & ANCHOR DETAILS

NOTE: THE LESSER OF THE DESIGN PRESSURES FROM TABLES ON SHEETS 2 & 3 SHALL GOVERN.

15/16" O.A. INSULATED LAMINATED GLASS CONSISTING OF:
5/32" HEAT-STRENGTHENED GLASS
3/8" ALUMINUM SPACER
5/32" HEAT-STRENGTHENED GLASS
0.090" SENTRYGLAS INTERLAYER BY KURARAY
5/32" HEAT-STRENGTHENED GLASS

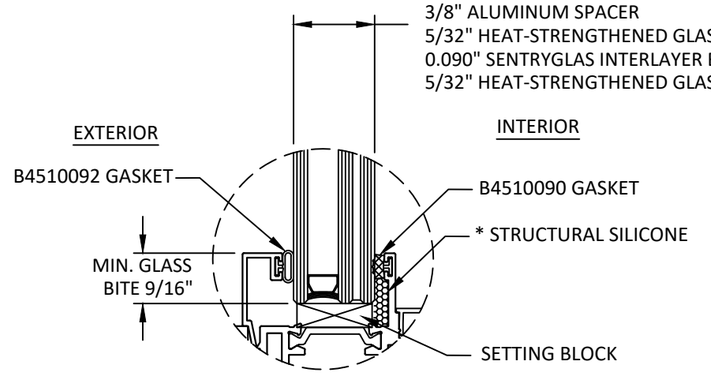

GLAZING DETAIL 1

*APROVED STRUCTURAL SILICONE:

DOWSIL - 993
DOWSIL - 983
DOWSIL - 895
DOWSIL - 795

GLAZING NOTES:

1. GLASS TYPE COMPLIES WITH ASTM E1300 REQUIREMENTS. TEMPER AND SAFETY GLAZING REQUIREMENTS SHALL BE REVIEWED ON A SITE SPECIFIC BASIS.
2. SACRIFICIAL LITE SHALL BE TEMPERED WHEN INSTALLED 30' OR HIGHER ABOVE GRADE IN HVHZ.
3. SETTING BLOCK DUROMETER HARDNESS OF 70-90 (SHORE A) AS REFERENCED IN FBC CHAPTER 24.
4. TWO APPROVED SETTING BLOCKS SHALL BE USED FOR GLASS WIDER THAN 36" AS PER FBC CHAPTER 24.
5. D.L.O. AND DESIGN PRESSURES MAY NOT EXCEED MAX. VALUES SHOWN ON TABLE IN SHEET 1 OR ELEVATIONS ON SHEETS 2 & 3.

LINEA ROSSA WINDOWS & DOORS
1850 NW. 84TH AVE., STE. 114
DORAL, FL 33126
PH: (305)815-8797

TITLE: *LR-530F THERMALLY BROKEN FIXED WINDOW (HVHZ)(IMPACT)*
GENERAL NOTES & GLAZING DETAIL

PREPARED BY: BUILDING DROPS, INC.
398 E. DANIA BEACH BLVD., STE. 338
DANIA BEACH, FL 33004
PH: (954)399-8478
FAX: (954)744.4738
WEB: www.buildingdrops.com

REMARKS	BY	DATE

THE INSTALLATION DETAILS DESCRIBED HEREIN ARE GENERIC AND MAY NOT REFLECT ACTUAL CONDITIONS FOR A SPECIFIC SITE. IF SITE CONDITIONS CAUSE INSTALLATION TO DEVIATE FROM THE REQUIREMENTS DETAILED HEREIN, A LICENSED ENGINEER OR ARCHITECT SHALL PREPARE SITE SPECIFIC DOCUMENTS FOR USE WITH THIS DOCUMENT.

Digitally signed by Hermes F. Norero, P.E
Reason: I am approving this document
Date: 2023.10.21 12:24:00 -04'00'

HERMES F. NORERO LICENSE No. 73778 STATE OF FLORIDA PROFESSIONAL ENGINEER

HERMES F. NORERO, P.E.
LICENSE NO. 73778
398 E. DANIA BEACH BLVD., STE. 338
DANIA BEACH, FL 33004
FBPE CERT. OF AUTHORIZATION NO. 29578

FL41693

DATE: 10.06.2023
DWG. BY: SH
CHK. BY: HFN
SCALE: NTS
DWG. #: LRA019
SHEET: 1 OF 6

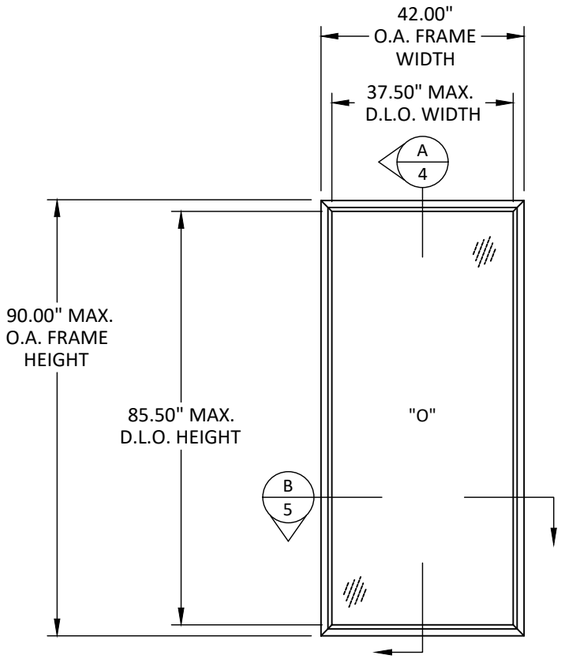

ELEVATION

SINGLE - FIXED WINDOW

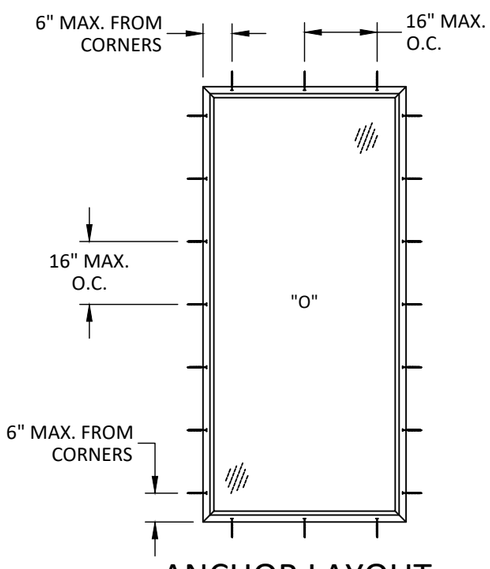

ANCHOR LAYOUT

SINGLE THROUGH FRAME - FIXED WINDOW

DESIGN PRESSURE TABLE (+/- PSF)		
WINDOW DIMENSIONS		STANDALONE UNIT
FRAME WIDTH (IN.)	FRAME HEIGHT (IN.)	
26.5	26	80.0
37.0		80.0
53.125		80.0
74.0		80.0
26.500	38.375	80.0
37.0		80.0
53.125		80.0
74.0		80.0
24.000	48	80.0
30.000		80.0
36.000		80.0
42.000		80.0
48.000		70.0
26.500	50.625	80.0
37.000		80.0
53.125		66.4
74.000		66.4
48.000	54	70.0
24.000		80.0
30.000		80.0
36.000		80.0
42.000		80.0
48.000		70.0
54.000		62.2
24.000	60	80.0
30.000		80.0
36.000		80.0
42.000		80.0
48.000		70.0
54.000		62.2
26.500	63	80.0
37.000		80.0
53.125		63.2
24.000	66	80.0
30.000		80.0
36.000		80.0
42.000		80.0
48.000		70.0
54.000		62.2
24.000	72	80.0
30.000		80.0
36.000		80.0
42.000		80.0
48.000		70.0

DESIGN PRESSURE TABLE (+/- PSF)		
WINDOW DIMENSIONS		STANDALONE UNIT
FRAME WIDTH (IN.)	FRAME HEIGHT (IN.)	
26.500	76	80.0
37.000		80.0
24.000	78	80.0
30.000		80.0
36.000		80.0
42.000		80.0
48.000		70.0
24.000	84	80.0
30.000		80.0
36.000		80.0
42.000		80.0
18.000	90	80.0
24.000		80.0
30.000		80.0
36.000		80.0
42.000		80.0

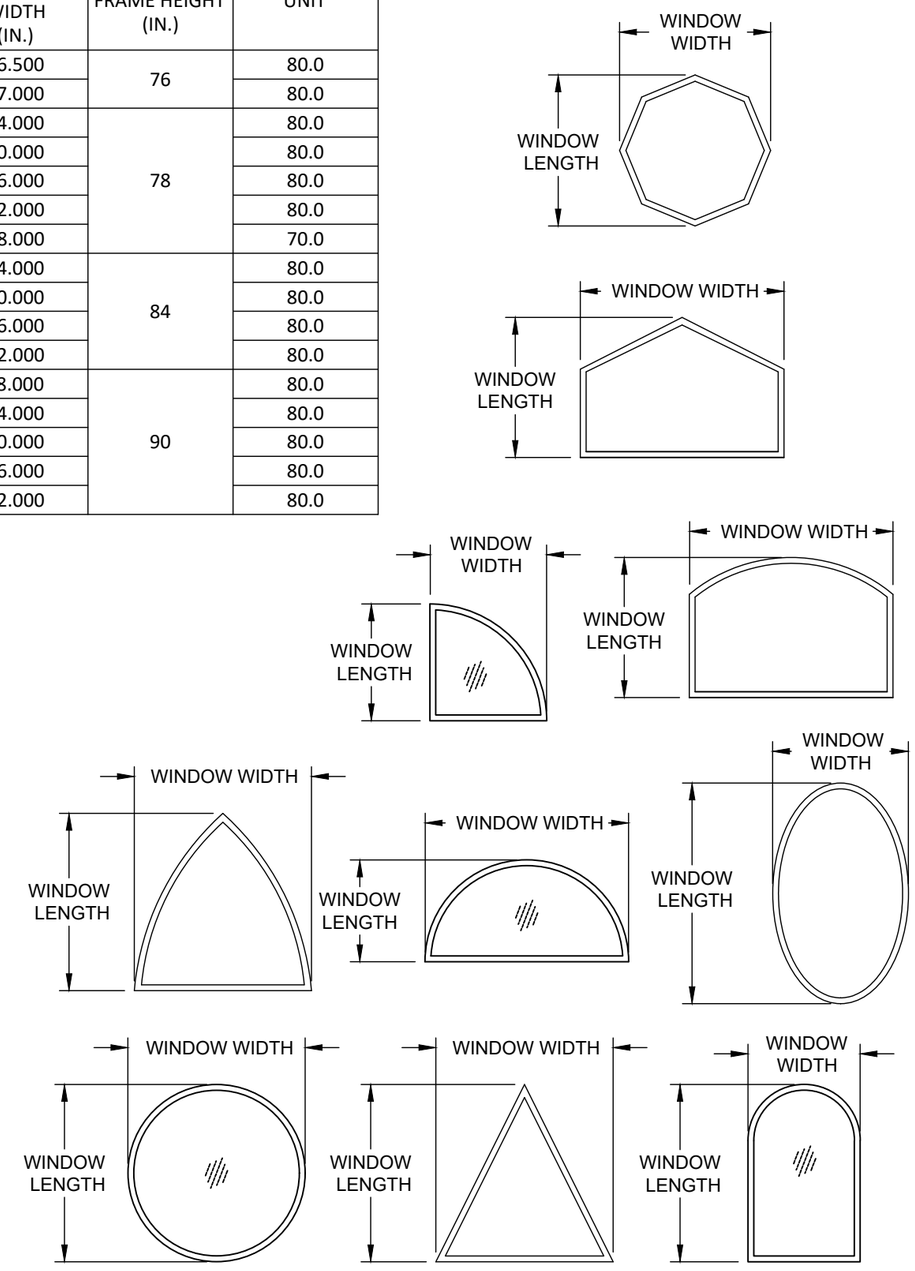

ELEVATION

APPROVED WINDOW CONFIGURATIONS OPTIONS

LINEA ROSSA WINDOWS & DOORS
1850 NW. 84TH AVE., STE. 114
DORAL, FL 33126
PH: (305)815-8797

TITLE: *LR-530F THERMALLY BROKEN FIXED WINDOW (HVHZ)(IMPACT)*
ELEVATION, ANCHOR LAYOUT, & DESIGN PRESSURE TABLE

PREPARED BY: BUILDING DROPS, INC.
398 E. DANIA BEACH BLVD., STE. 338
DANIA BEACH, FL 33004
PH: (954)399-8478
FAX: (954)744.4738
WEB: www.buildingdrops.com

REMARKS	BY	DATE

THE INSTALLATION DETAILS DESCRIBED HEREIN ARE GENERIC AND MAY NOT REFLECT ACTUAL CONDITIONS FOR A SPECIFIC SITE. IF SITE CONDITIONS CAUSE INSTALLATION TO DEVIATE FROM THE REQUIREMENTS DETAILED HEREIN, A LICENSED ENGINEER OR ARCHITECT SHALL PREPARE SITE SPECIFIC DOCUMENTS FOR USE WITH THIS DOCUMENT.

HERMES F. NORERO
LICENSE
No. 73778
STATE OF
FLORIDA
PROFESSIONAL ENGINEER
HERMES F. NORERO
FL LICENSE NO. 73778
398 E. DANIA BEACH BLVD., STE. 338
DANIA BEACH, FL 33004
FBPE CERT. OF AUTHORIZATION NO. 29578

FL41693

DATE: 10.06.2023

DWG. BY: SH | CHK. BY: HFN

SCALE: NTS

DWG. #: LRA019

SHEET: 2 OF 6

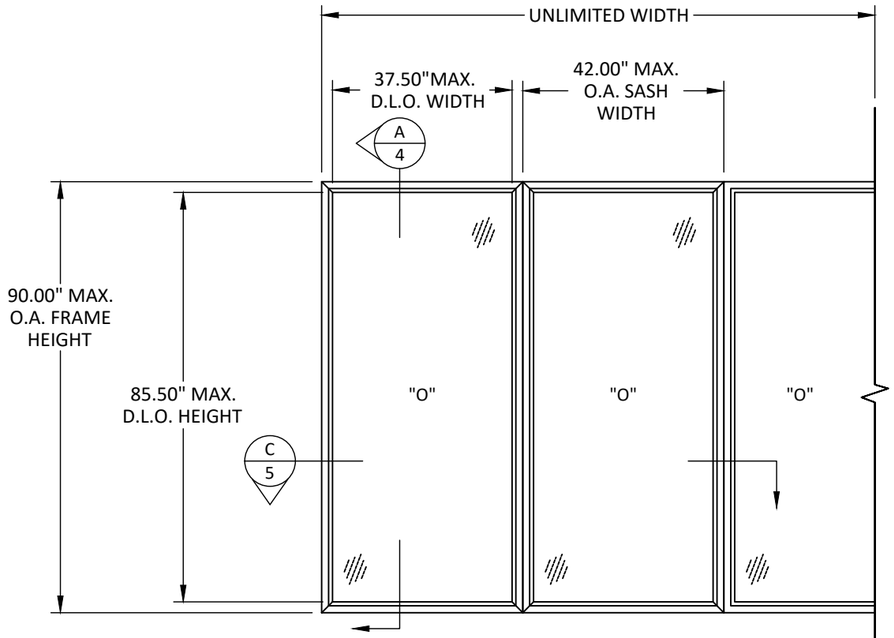

ELEVATION

MULLED - FIXED WINDOW

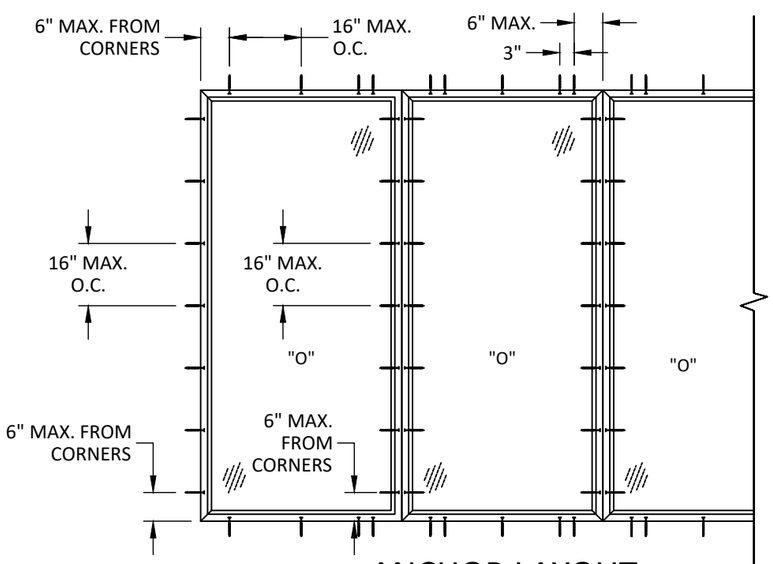

ANCHOR LAYOUT

MULLED - THROUGH FRAME - FIXED WINDOW

DESIGN PRESSURE TABLE (+/- PSF)		
WINDOW DIMENSIONS		MULLED UNIT
FRAME WIDTH (IN.)	FRAME HEIGHT (IN.)	
26.5	26	80.0
37.0		80.0
53.125		80.0
74.0		80.0
26.500	38.375	80.0
37.0		80.0
53.125		80.0
74.0		80.0
24.000	48	80.0
30.000		80.0
36.000		80.0
42.000		80.0
48.000		80.0
26.500	50.625	80.0
37.000		80.0
53.125		80.0
74.000		80.0
48.000	54	80.0
24.000		80.0
30.000		80.0
36.000		80.0
42.000		80.0
48.000		80.0
54.000		80.0
24.000	60	80.0
30.000		80.0
36.000		80.0
42.000		80.0
48.000		80.0
54.000		80.0
26.500	63	80.0
37.000		80.0
53.125		80.0
24.000	66	80.0
30.000		80.0
36.000		80.0
42.000		80.0
48.000		80.0
54.000		80.0
24.000	72	80.0
30.000		80.0
36.000		80.0
42.000		80.0
48.000		80.0

DESIGN PRESSURE TABLE (+/- PSF)		
WINDOW DIMENSIONS		MULLED UNIT
FRAME WIDTH (IN.)	FRAME HEIGHT (IN.)	
26.500	76	80.0
37.000		80.0
24.000	78	80.0
30.000		80.0
36.000		80.0
42.000		80.0
48.000		80.0
24.000	84	80.0
30.000		80.0
36.000		80.0
42.000		80.0
18.000	90	80.0
24.000		80.0
30.000		80.0
36.000		80.0
42.000		80.0

LINEA ROSSA WINDOWS & DOORS
1850 NW. 84TH AVE., STE. 114
DORAL, FL 33126
PH: (305)815-8797

TITLE: *LR-530F THERMALLY BROKEN FIXED WINDOW (HVHZ)(IMPACT)*
ELEVATION, ANCHOR LAYOUT, & DESIGN PRESSURE TABLE

PREPARED BY: BUILDING DROPS, INC.
398 E. DANIA BEACH BLVD., STE. 338
DANIA BEACH, FL 33004
PH: (954)399-8478
FAX: (954)744.4738
WEB: www.buildingdrops.com

REMARKS	BY	DATE

THE INSTALLATION DETAILS DESCRIBED HEREIN ARE GENERIC AND MAY NOT REFLECT ACTUAL CONDITIONS FOR A SPECIFIC SITE. IF SITE CONDITIONS CAUSE INSTALLATION TO DEVIATE FROM THE REQUIREMENTS DETAILED HEREIN, A LICENSED ENGINEER OR ARCHITECT SHALL PREPARE SITE SPECIFIC DOCUMENTS FOR USE WITH THIS DOCUMENT.

HERMES F. NORERO
LICENSE
No. 73778
STATE OF
FLORIDA
PROFESSIONAL ENGINEER

HERMES F. NORERO
FL LICENSE NO. 73778
398 E. DANIA BEACH BLVD., STE. 338
DANIA BEACH, FL 33004
FBPE CERT. OF AUTHORIZATION NO. 29578

FL41693

DATE: 10.06.2023

DWG. BY: SH | CHK. BY: HFN

SCALE: NTS

DWG. #: LRA019

SHEET: 3 OF 6

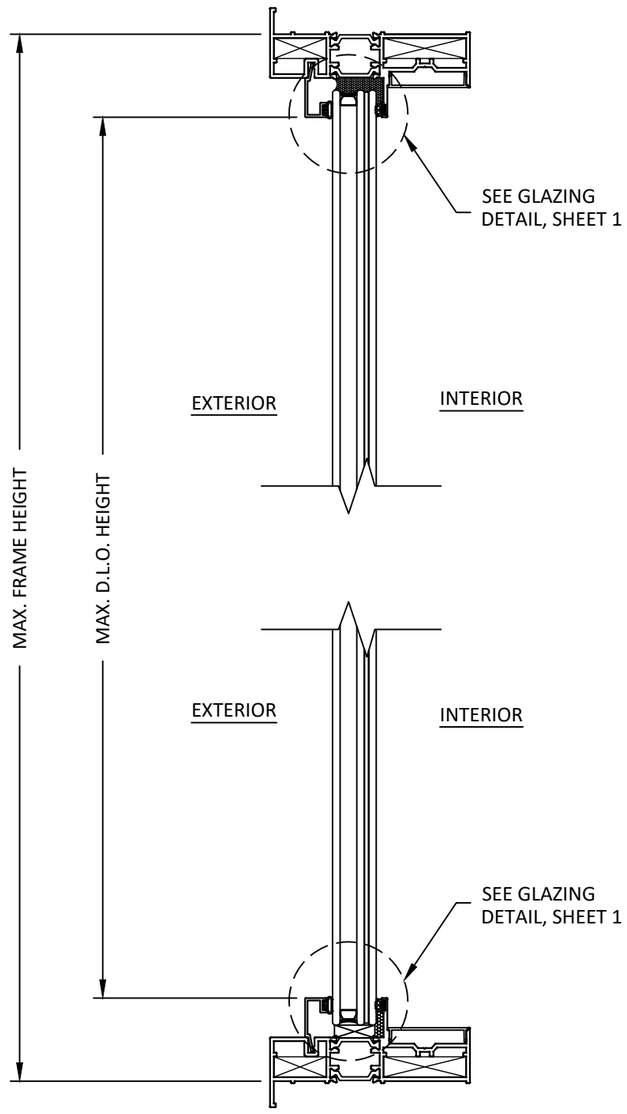

A
4

VERTICAL SECTION

SINGLE & MULLION - FIXED WINDOW

LINEA ROSSA
WINDOWS & DOORS

1850 NW. 84TH AVE., STE. 114
DORAL, FL 33126
PH: (305)815-8797

TITLE: *LR-530F THERMALLY BROKEN FIXED WINDOW (HVHZ)(IMPACT)*

VERTICAL SECTION

PREPARED BY: BUILDING DROPS, INC.
398 E. DANIA BEACH BLVD., STE. 338
DANIA BEACH, FL 33004
PH: (954)399-8478
FAX: (954)744.4738
WEB: www.buildingdrops.com
BUILDING DROPS

REMARKS	BY	DATE

THE INSTALLATION DETAILS DESCRIBED HEREIN ARE GENERIC AND MAY NOT REFLECT ACTUAL CONDITIONS FOR A SPECIFIC SITE. IF SITE CONDITIONS CAUSE INSTALLATION TO DEVIATE FROM THE REQUIREMENTS DETAILED HEREIN, A LICENSED ENGINEER OR ARCHITECT SHALL PREPARE SITE SPECIFIC DOCUMENTS FOR USE WITH THIS DOCUMENT.

HERMES F. NORERO
LICENSE
No. 73778
STATE OF
FLORIDA
PROFESSIONAL ENGINEER

HERMES F. NORERO
LICENSE NO. 73778
398 E. DANIA BEACH BLVD., STE. 338
DANIA BEACH, FLORIDA
FBPE CERT. OF AUTHORIZATION NO. 29578

FL41693

DATE: 10.06.2023

DWG. BY: SH | CHK. BY: HFN

SCALE: NTS

DWG. #: LRA019

SHEET: OF 6

4

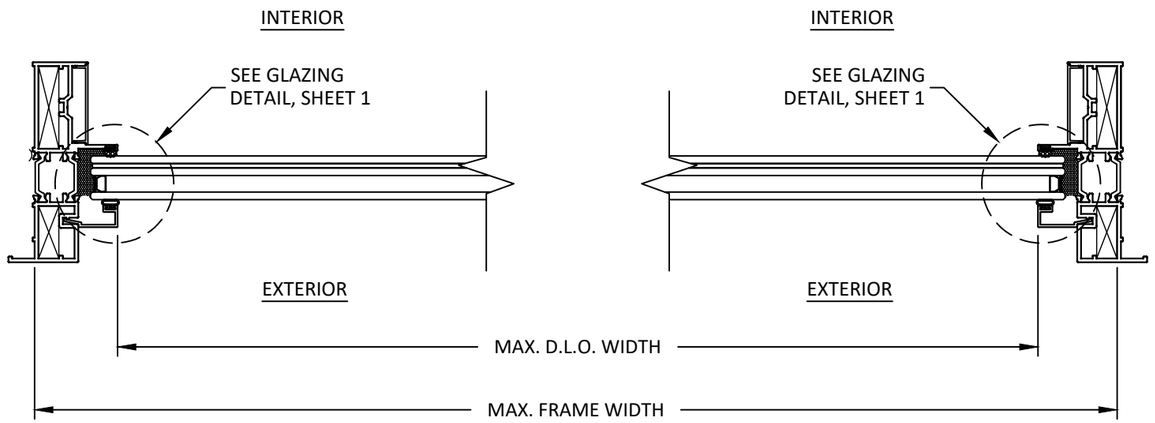

B/5 HORIZONTAL SECTION

SINGLE - FIXED WINDOW

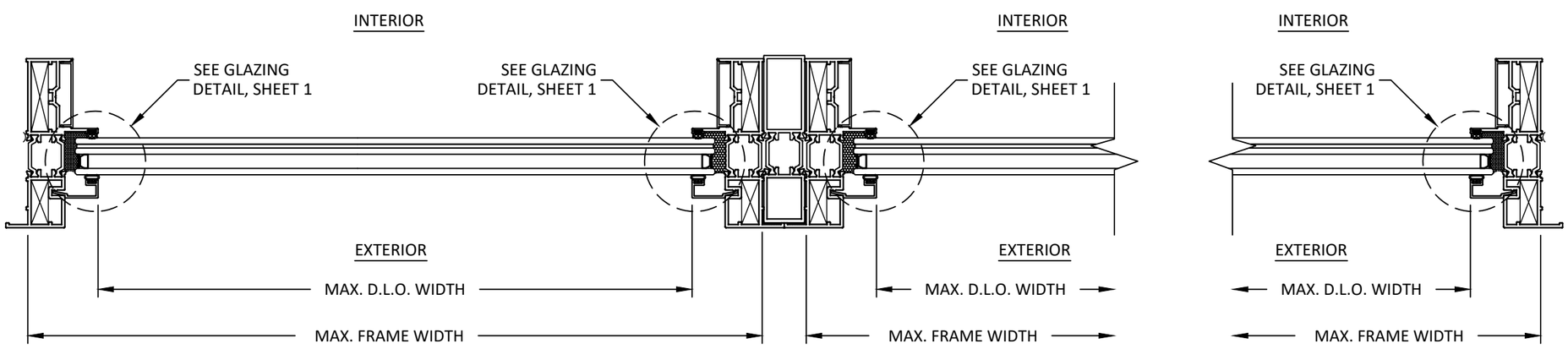

C/5 HORIZONTAL SECTION

MULLED - FIXED WINDOW

LINEA ROSSA WINDOWS & DOORS
1850 NW. 84TH AVE., STE. 114
DORAL, FL 33126
PH: (305)815-8797

TITLE: *LR-530F THERMALLY BROKEN FIXED WINDOW (HVHZ)(IMPACT)*

HORIZONTAL SECTIONS

PREPARED BY: BUILDING DROPS, INC.
398 E. DANIA BEACH BLVD., STE. 338
DANIA BEACH, FL 33004
PH: (954)399-8478
FAX: (954)744.4738
WEB: www.buildingdrops.com
BUILDING DROPS

REMARKS	BY	DATE

THE INSTALLATION DETAILS DESCRIBED HEREIN ARE GENERIC AND MAY NOT REFLECT ACTUAL CONDITIONS FOR A SPECIFIC SITE. IF SITE CONDITIONS CAUSE INSTALLATION TO DEVIATE FROM THE REQUIREMENTS DETAILED HEREIN, A LICENSED ENGINEER OR ARCHITECT SHALL PREPARE SITE SPECIFIC DOCUMENTS FOR USE WITH THIS DOCUMENT.

HERMES F. NORERO
LICENSE
No. 73778
STATE OF
FLORIDA
PROFESSIONAL ENGINEER

HERMES F. NORERO
FL LICENSE NO. 73778
398 E. DANIA BEACH BLVD., STE. 338
DANIA BEACH, FL 33004
FBPE CERT. OF AUTHORIZATION NO. 29578

FL41693

DATE: 10.06.2023

DWG. BY: SH

CHK. BY: HFN

SCALE: NTS

DWG. #: LRA019

SHEET: 5 OF 6

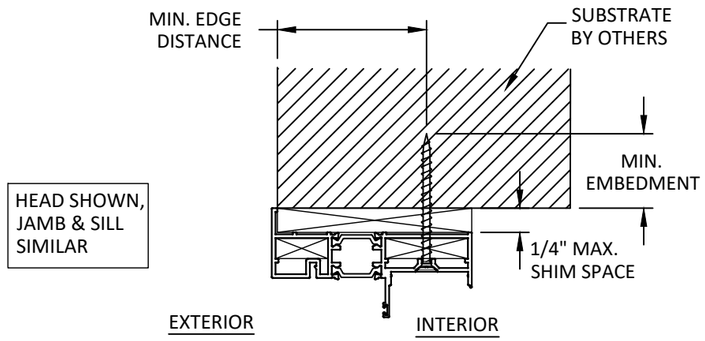

A/6 ANCHOR DETAIL
THROUGH FRAME (HEAD)

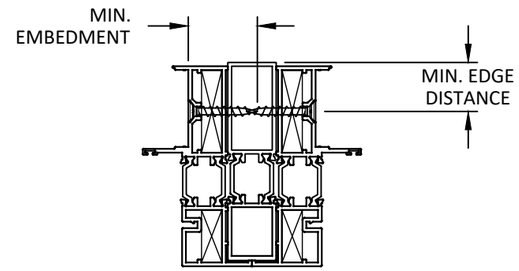

B/6 ANCHOR DETAIL
THROUGH FRAME (MULLION)

INSTALLATION NOTES:

1. ONE (1) INSTALLATION ANCHOR IS REQUIRED AT EACH ANCHOR LOCATION SHOWN.
2. THE NUMBER OF INSTALLATION ANCHORS DEPICTED IS THE MINIMUM NUMBER OF ANCHORS TO BE USED FOR PRODUCT INSTALLATION OF THE MAXIMUM SIZE LISTED.
3. INSTALL INDIVIDUAL INSTALLATION ANCHORS WITHIN A TOLERANCE OF ±1/2 INCH THE DEPICTED LOCATION & SPACING IN THE ANCHOR LAYOUT DETAILS (I.E., WITHOUT CONSIDERATION OF TOLERANCES). TOLERANCES ARE NOT CUMULATIVE FROM ONE INSTALLATION ANCHOR TO THE NEXT.
4. SHIM AS REQUIRED AT EACH INSTALLATION ANCHOR WITH LOAD BEARING SHIM(S). MAXIMUM ALLOWABLE SHIM STACK TO BE 1/4" INCH. SHIM WHERE SPACE OF 1/16 INCH OR GREATER OCCURS. SHIM(S) SHALL BE CONSTRUCTED OF HIGH DENSITY PLASTIC OR BETTER.
5. FOR MASONRY OR CONCRETE OPENINGS, 1X WOOD BUCK MAY BE USED (OPTIONAL AS LONG AS THE MINIMUM EMBEDMENT AND EDGE DISTANCE REQUIREMENTS ARE STILL MET WITHIN THE CORRESPONDING HOST SUBSTRATE. SEE GENERAL NOTE #3 ON SHEET 1 FOR MORE INFORMATION.
6. MINIMUM EMBEDMENT AND EDGE DISTANCE EXCLUDE WALL FINISHES, INCLUDING BUT NOT LIMITED TO STUCCO, FOAM, BRICK VENEER, AND SIDING.
7. INSTALLATION ANCHORS AND ASSOCIATED HARDWARE MUST BE MADE OF CORROSION RESISTANT MATERIAL OR HAVE A CORROSION RESISTANT COATING.
8. FOR HOLLOW BLOCK AND GROUT FILLED BLOCK, DO NOT INSTALL INSTALLATION ANCHORS INTO MORTAR JOINTS. EDGE DISTANCE IS MEASURED FROM FREE EDGE OF BLOCK OR EDGE OF MORTAR JOINT INTO FACE SHELL OF BLOCK.
9. INSTALLATION ANCHORS SHALL BE INSTALLED IN ACCORDANCE WITH ANCHOR MANUFACTURER'S INSTALLATION INSTRUCTIONS, AND ANCHORS SHALL NOT BE USED IN SUBSTRATES WITH STRENGTHS LESS THAN THE MINIMUM STRENGTH SPECIFIED BY THE ANCHOR MANUFACTURER.

ANCHOR SCHEDULE

METHOD	SUBSTRATE TYPE	SUBSTRATE	ANCHOR TYPE	MIN. EMBEDMENT	MIN. EDGE DISTANCE
THROUGH FRAME	A	WOOD: MIN. SG = 0.55	1/4" DEWALT ULTRACON+	1.50"	1.00"
	B	METAL: 18 GAUGE STEEL, MIN. Fy = 33KSI ALUMINUM .125" MIN, 6063-T5 MIN	#14 SELF-DRILLING SCREW GR. 5	3 THREADS MIN. PENETRATION BEYOND METAL	0.75"
	C	CONCRETE: f'c=3000PSI	1/4" DEWALT ULTRACON+	1.75"	2.50"
	D	MASONRY: CMU per ASTM C90 MIN. 2000 PSI		1.75"	2.50"
MULLIONS	E	ALUMINUM 6063-T6	1 / 4" DEWALT DRILL-FLEX	3 THREADS MIN. PENETRATION BEYOND METAL	0.75"

LINEA ROSSA WINDOWS & DOORS
1850 NW. 84TH AVE., STE. 114
DORAL, FL 33126
PH: (305)815-8797

TITLE: *LR-530F THERMALLY BROKEN FIXED WINDOW (HVHZ)(IMPACT)*
INSTALLATION NOTES & ANCHOR DETAILS

PREPARED BY: BUILDING DROPS, INC.
398 E. DANIA BEACH BLVD., STE. 338
DANIA BEACH, FL 33004
PH: (954)399-8478
FAX: (954)744.4738
WEB: www.buildingdrops.com
BUILDING DROPS

REMARKS	BY	DATE

THE INSTALLATION DETAILS DESCRIBED HEREIN ARE GENERIC AND MAY NOT REFLECT ACTUAL CONDITIONS FOR A SPECIFIC SITE. IF SITE CONDITIONS CAUSE INSTALLATION TO DEVIATE FROM THE REQUIREMENTS DETAILED HEREIN, A LICENSED ENGINEER OR ARCHITECT SHALL PREPARE SITE SPECIFIC DOCUMENTS FOR USE WITH THIS DOCUMENT.

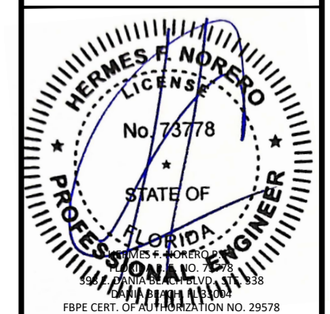

FL41693

DATE: 10.06.2023
DWG. BY: SH
CHK. BY: HFN
SCALE: NTS
DWG. #: LRA019
SHEET: 6 OF 6